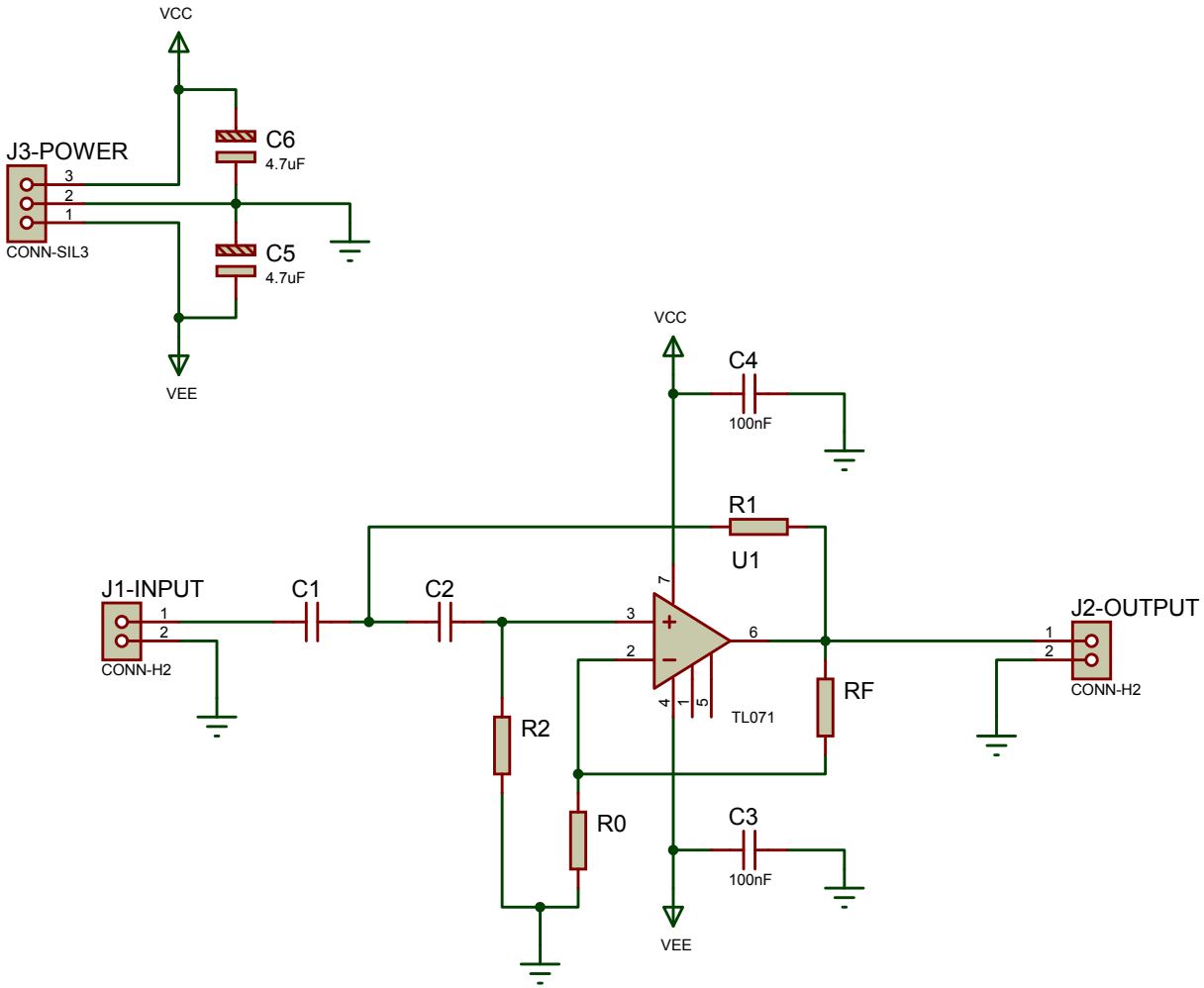
VCC
J3-POWER
3
2
1
CONN-SIL3
C6
4.7uF
C5
4.7uF
VEE
VCC
C4
100nF
R1
U1
J1-INPUT
1
2
CONN-H2
C1
C2
7
3
2
6
4
1
5
TL071
J2-OUTPUT
1
2
CONN-H2
RF
R2
R0
C3
100nF
VEE